FIXTURE SPECIFICATIONS

CALL OR FAX TOLL FREE NATIONWIDE SALES: 1-800-944-WBWB

8" DECK MOUNTED FAUCET

9334786A

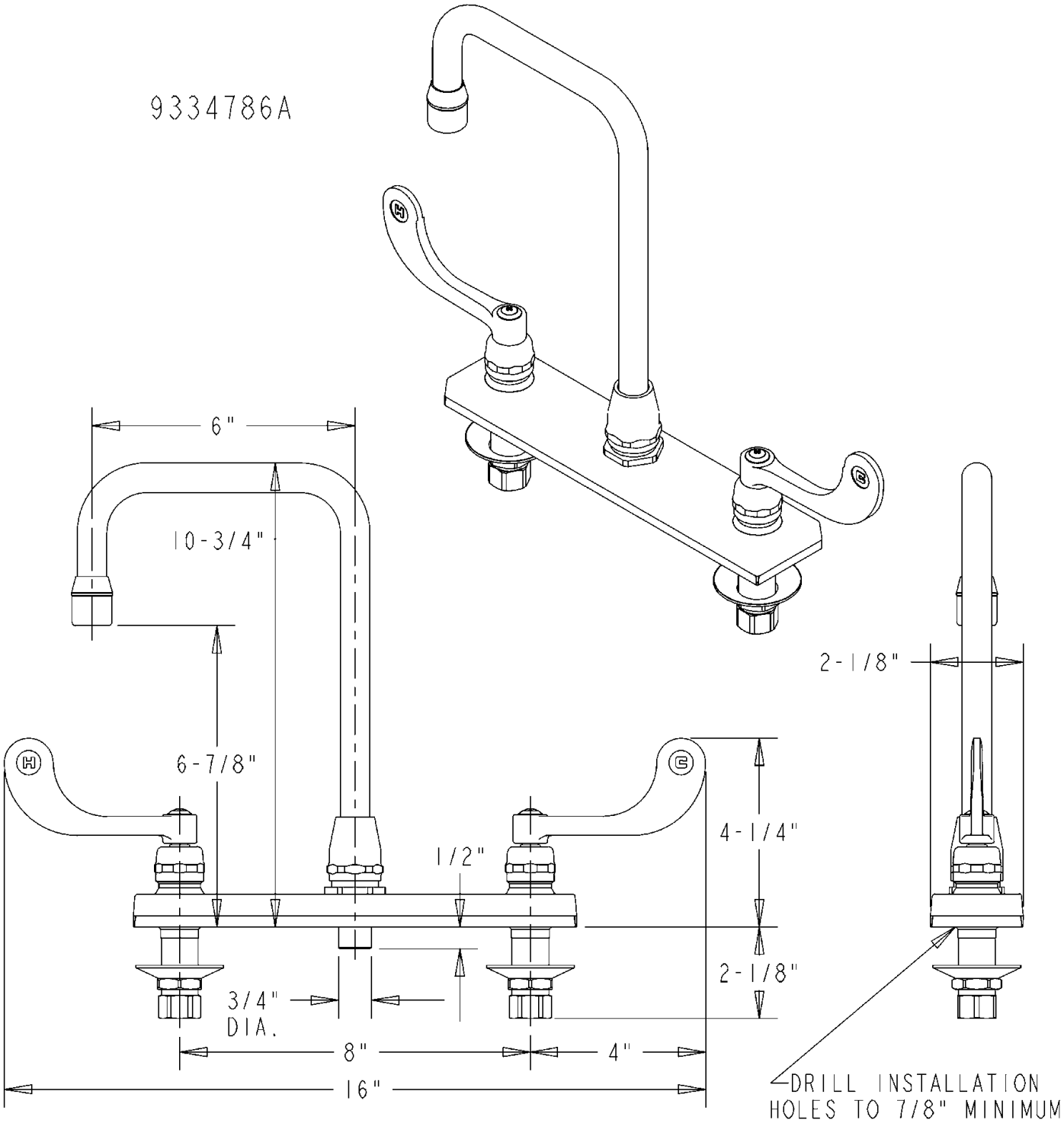

WB WOLVERINE BRASS, INC. 2951 HWY. 501 EAST CONWAY, SC 29526