WB Wolverine Brass

SPECIFICATION SHEET

8" Deck Mounted Faucet

9334786A

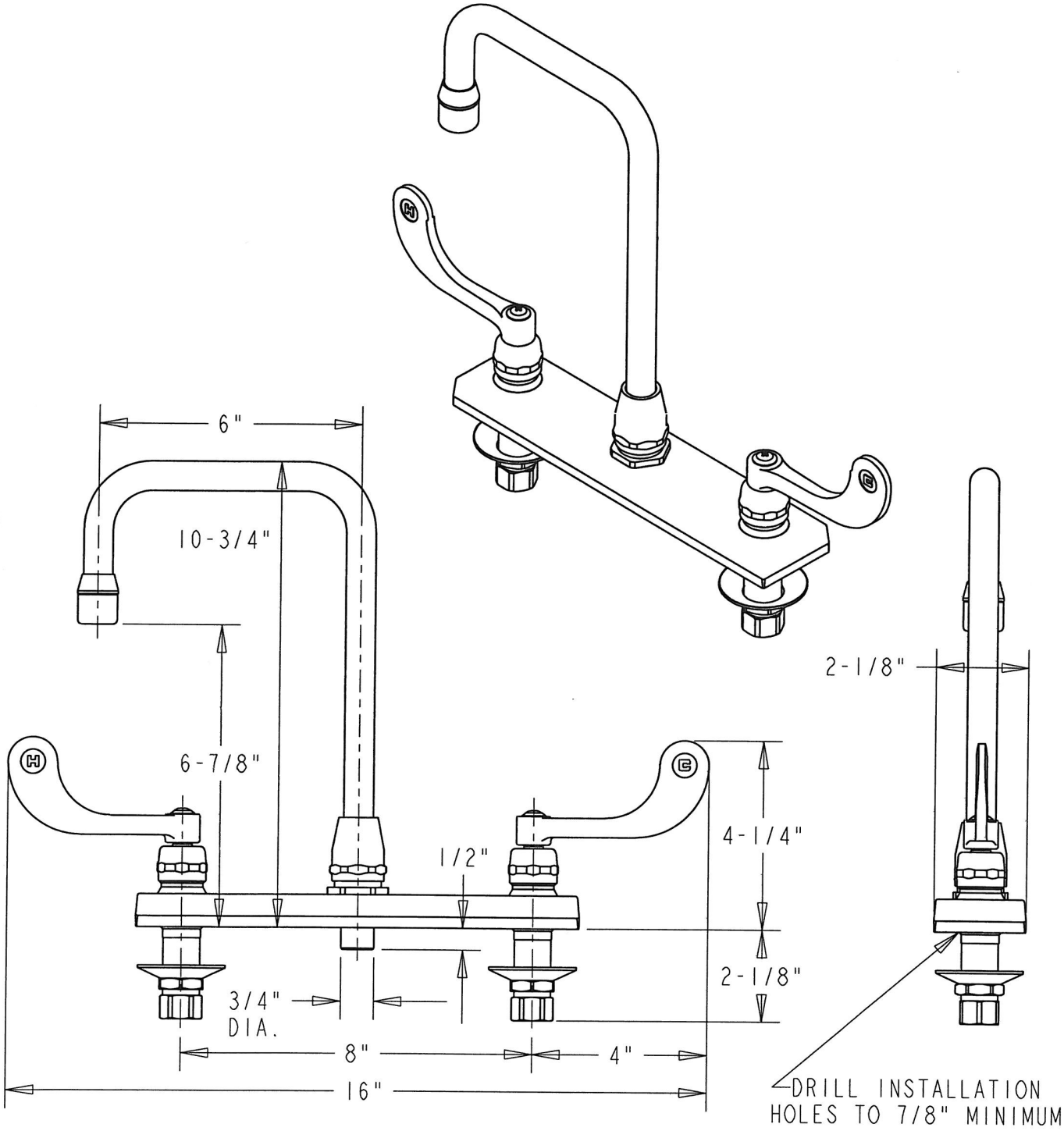

9334786A

2951 Hwy 501 East • Conway, SC 29526 • 1-800-944-9292 • Fax: 1-800-945-9292